EM-151B BRUSHLESS DC MOTOR DRIVER 12-24V 25A

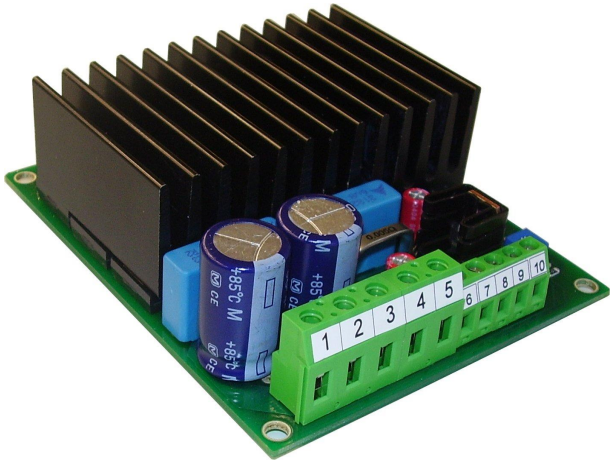

FEATURES

- Three phase output
- Open or Closed loop speed cont.
- Controlled direction change
- Dynamic or Regenerative braking
- 60° or 120° commutation
- ±10V control option
- Fault output
- High efficiency
- Thermal protection
- Rail base mountable

EM-151B is a DC-motor driver for brushless dc-motor with hall-sensors. The commutation angle can be 60 or 120 deg. It has two modes for speed control. In open loop mode driver works like normal dc-motor speed controller. In closed loop mode the hall pulses are used as speed feedback. Closed loop mode offers a high accuracy in speed control.
The speed control input signal can be scaled with zero and range trims. Card includes also an acceleration and deceleration ramp adjustment for smooth starts and stops. The ramp is used also in direction change, that way it can be done controlled and smoothly. Current limit is also adjustable with trimmer. Regenerative braking can be used when power is supplied from a battery. In this case the current limit adjustment works also in braking. In overcurrent the driver activates the fault output.

TECHNICAL DATA

Supply voltage 12-32Vdc (11-35Vcd)
Undervoltage cut out 11V
Overvoltage cut out 38V
Motor current cont. max 20A (Ta<40℃)
Motor current peak max 40A (5s.)
Temperature limit 100℃ (heatsink)
Current limit adjust 0-40A
Decelerating cur. limit adj. 0-40A
Speed set signal 0-5V...0-30V
Speed set input impedance 100kohm
Ramp time 0.1s-5s. (adjustable)
PWM motor-frequency 18kHz
Digital control "on" 4-30V, "off" 0-1V or open
Control input impedances typ. 10kohm
Fault out. NPN open coll. max 30V / 10mA
Motor and supply connectors 4mm2
Control connectors 1.5mm2
Dimensions 108x91x40mm
Weight 230g
Recommended operating temp (Ta) -30...60℃

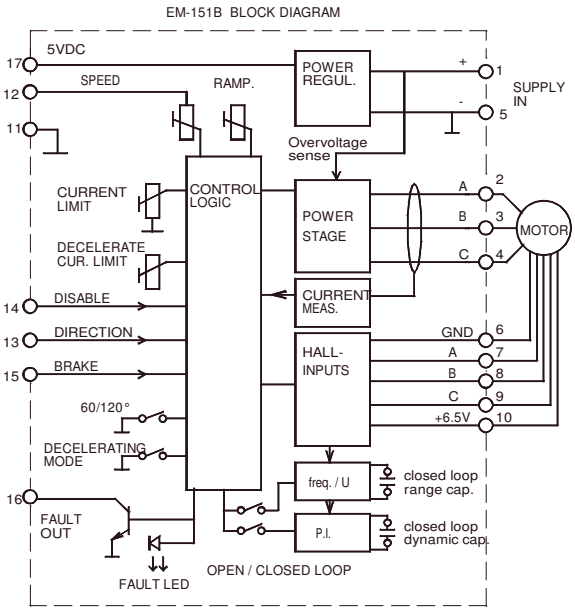

ELECTROMEN Oy www.electromen.com

INSTRUCTION GUIDE EM-151B

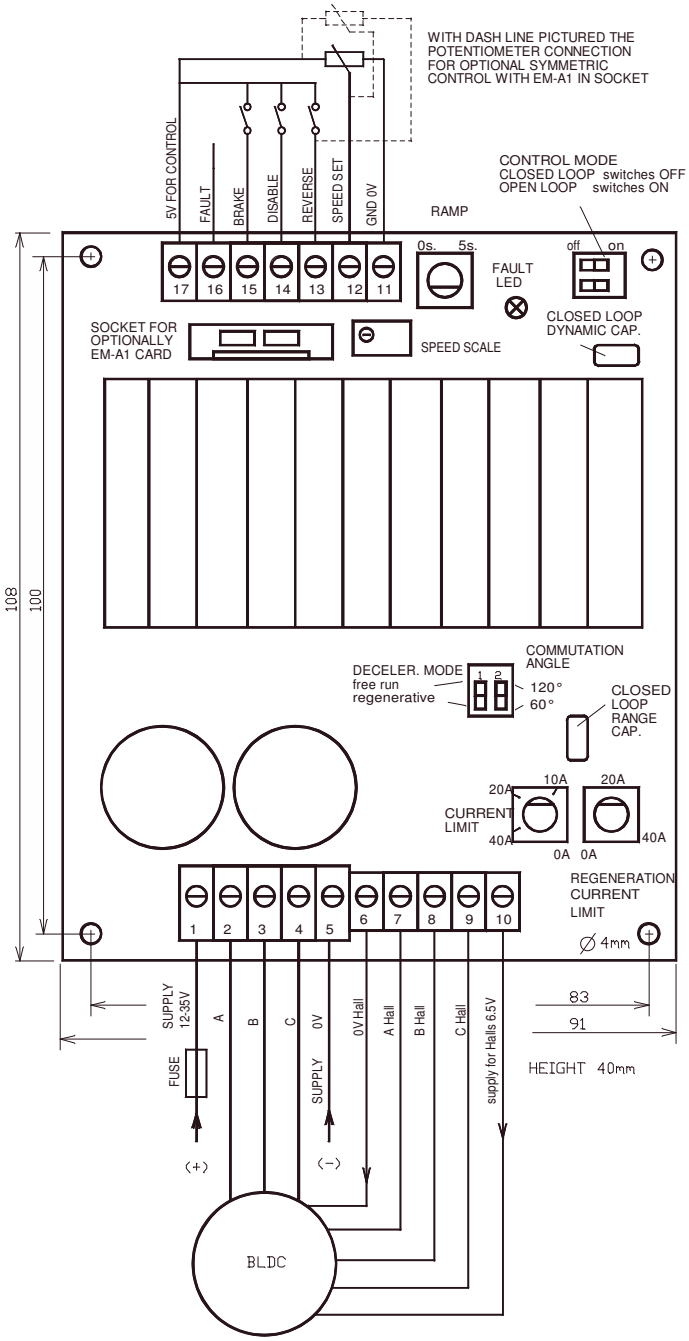

Operating voltage 12-32Vdc filtered dc, ripple less than 20% .
Use suitable external fuse for application, but less than 40A
The wrong polarity connection can damage the device.
Be carefull also with the motor hall sensor connection.

Speed can be controlled with a potentiometer or voltage signal from 0-5V to 0-30V. The speed set input signal can be adjusted with speed scale trimmer. Speed set signal can also be eg. 24V PWM from PLC as long as the frequency is higher than 1kHz. Optionally it is possible to have zero symmetric voltage control, using EM-A1option card. When EM-A1 is plugged in to its socket, the direction input (pin 13) changes to -5V output for potentiometer. In symmetrical control the motor is stopped when potentiometer is in the middle position. An outside speed set voltage signal can be from ±5 to ±30V. The RAMP adjustment can be used to smoothen the acceleration and deleration. Ramp time is adjustable from 0.1 to 5s. (0-100% / 100%-0 speed).

Speed CONTROL MODE can be selected to be an open or closed loop mode. The selection is made with two dip switches.
In open loop mode the motor is driven like normal DC-motor. In closed loop mode the driver uses the Hall-pulses as speed feed-back.
The closed loop speed range can be changed with CLOSED LOOP RANGE CAP. Smaller capasitor will offer higher speed range and the fine adjustment is made with SPEED SCALE trimmer. The factory preset value is 4.7nF which gives range up to about 6000rpm.
Size of this capasitor is inversely proportional to the speed range.
The dynamic behaviour of closed loop control can be tuned with CLOSED LOOP DYNAMIC CAP. For smaller speeds should be used a higher capasitor value. Factory preset value for this is 330nF.
On lower speed application this capasitor should be bigger, and on higher speed it should be smaller.

The digital control input works with positive commands (PNP)
The control voltage can be from 5V up to 30V.
DIR. command is used to change the rotation direction of the motor.
Dir will utilize automatically decelaration and acceleration ramps.
BRAKE command shorts the motor poles and gives a strong dynamic brake effect.
DISABLE command releases motor poles(freewheeling).
This command has the highest priority.

The right COMMUTATION ANGLE can be selected to be 60° or 120°. Selection is made with dip switch.

The DECELERATE MODE can be set to be regenerative or freewheeling. In regenerative mode the motor generates current back to the supply as the motor is decelerating. This mode is usefull only when the supply is from a battery that can accept this energy back. Also a braking load can be used.
CAUTION ! If normal power supply is used with regenerative braking the voltage could rise up to 40V which can damage the power supply. In freewheeling mode energy is not returned to supply, but of course the decelaration is also weak.
NOTICE ! The digital BRAKE command shorts the motor poles and does not regenerate energy (so called dynamic braking).

The CURRENT LIMIT limits the motor current. Exceeding this limit is indicated with FAULT LED and FAULT output.
The DECELERATION CURRENT LIMIT limits the current during the deceleration if regenerative mode is selected.
NOTICE ! The deceleration current limit does not work with digital brake command.