EM-356B BRUSHLESS DC-MOTOR DRIVER 12-35V 15A (20A)

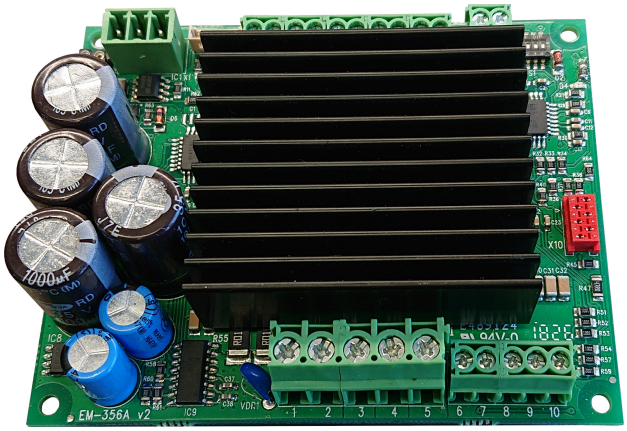

FEATURES

- For with Hall sensors
- Three phase output
- Speed and torgue adjustment
- Open/closed loop modes
- Regenerative braking option
- True 4Q-power stage
- Braking resistor output
- Fan control output
- Output current 25A with fan
- Current limit and trip
- Fault output
- Rpm-pulse output option
- Good efficiency
- Low EMC emissions
- DIN-rail mountable

Firmvare - B v1.0 or later
- Rs-485 Modbus control option

GENERAL

EM-356B is brushless DC-motor driver with hall sensor feedback. The unit has a mosfet power stage with good efficiency and it meets also todays EMC requirements. The driver can be used with 120° commutation. This driver has true 4Q power stage, and it makes possible to use regenerative braking . In this braking method the supply voltage rises, this voltage rising can be controlled with braking resistor. If uses battery supply then the braking energy can be leaded back to battery and braking resistor will not needed.
The unit has the basic digital command inputs like direction, start/stop, disable, speed-2 activation and there is analog inputs for speed and current control. EM-356A has PNP output for fault indication use. Some input and output functions can be modified with parameters. Driver includes overvoltage, undervoltage and overtemperature protections. These fault situations are indicated with fault on-board LED. Current limit situations can be reset with reset input, reset-timer or by setting analog speed control to value to 0.

There are two control options for speed. Direct control (open loop) sets motor voltage in propotion to control voltage as with a standard DC-motor. Closed loop uses hall sensor feedback for speed control, this mode offers good speed regulation. Start and stop ramps work in both mode. Speed adjust range, closed loop rpm range and ramps can be set with parameter. Anolog input are filtered so that there can also use PWM signal for control speed and current.

Setting can be done digitally with EM-236 interface unit or with Emen-Tool lite program installed in PC and EM-328 adapter cable. Parameters stored into nonvolatile memory of device. This interface unit can also be monitored the current and rpm of motor.

Device can be installed in DIN-rail base and some enclosure options are also available.

TECHNICAL DATA

Supply voltage 12-24V (11-35Vdc)
Overvoltage shut down 40V
Idle current typ. 30mA
Max current 15A cont. (Tamb. 40 °C)
Max. current 20A cont. (with fan, Tamb. 40 °C)
Max current peak 40A (max 2s)
Max brake output current 10A
Pwm frequency typ. 16kHz
Overtemperature Temp shut down 90°C
Current limit setting 1-40A (step 1A)
Current limit analog scale 0-5V = 0-40A
Logic level of digital inputs
"off" = 0-1V or open / "on"= 4-30V
Input impedance of logic inputs 10k
Response time of digital input 2ms
Analog input range 0-5V up to 0-10V
Input impedance of analog inputs 100k
Input filter of analog input 100Hz
Fault outputs NPN max 50mA
Fan output NPN max. 100mA
EMC measured for industrial and env.
PCB material flammability class UL94V-0
Dimensions 89x73x32mm (height 44mm with fan)
Weight 150g and 200g with fan

EM-356B

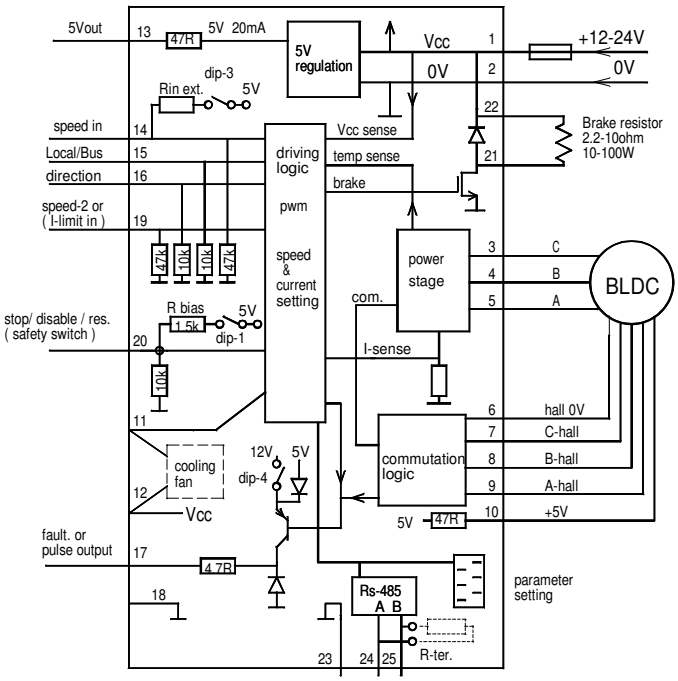

ELECTROMEN Oy www.electromen.com

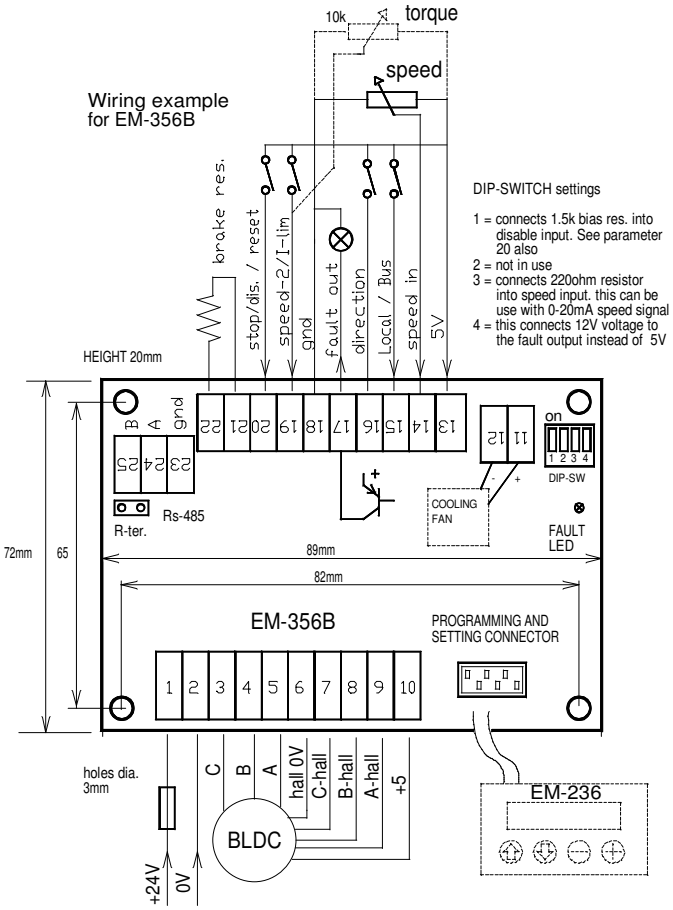

SETTABLE PARAMETERS (prog. 356B v1.0)

EM-356A parameters set with interface unit EM-236A or with Ementool-Lite and EM-328

1. mode: open loop =0 / closed loop=1 (0)
2. closed loop range 0-4 (3)
   0=30000rpm
   1=15000rpm
   2=9000rpm
   3=5000rpm
   4=3000rpm
3. start ramp 0-5s / 0-50 (10)
4. stop ramp 0-5s / 0-50 (5)
5. I-trip delay 0.01-2,5 / 0-255, 0=no trip, (200)
6. scale start speed 0-25.5% / 0-255 (0)
7. scale gain 0-2.55 / 0-255 (200)
8. closed loop dynamic P-factor 1-200 (10)
9. closed loop dynamic I-factor 1-200 (10)
10. regen. braking current limit 2-40A / 2-40 (25)
11. Local/Bus select input pin-15 options (0)
    0 = open or "low" = Local / "high" = Bus
    1 = open or "low" = Bus / "high" = Local
    2 = local/Bus control selection with Bus only
    3= local only and pin 15 would work as start/stop
12. current limit 0 / 1-40A / 1-40 (20)
    0= current setting with I-lim input pin 19
    1-40 = current limit
13. speed-2 value 0-100% / 0-100 (90)
14. I-trip reset mode (0)
    0= only with disable pin
    1= disable or with speed input change 0 to up
    10-200 = timer reset with 0.1s steps = 1-20s.
15 Over temp. reset mode (1)
    0= only with disable input
    1 = with speed input change 0 to up
    10-200 = timer reset 0.1s steps = 1-20s.
16 Indications of fault output pin 17 (1)
    0 = overtemp. and overvoltage
    1 = overtemp, overvoltage, and I-trip
    2 = overtemp, overvoltage, I-trip and overcurrent
    3 = reserved for pulse output use, see param 17
17 pulse output divider, enabled only if param. 16=3 (1)
    1 = 1pulse/round
    2 = 1pulse/ 2round...
    ...
    20= 1pulse/ 20round
18. brake res. threshold (=overvoltage) 15-60V / 15-60 (35)
    don't set this higher than max supply (35V)
19. brake output mode and braking mode 0-3 (0)
    0 = output active if param. 18 value exceed and brk. mode "regenerative"
    1= output active if param 18 value exceed and brk. mode "freewheel"
    2 = output active when "run" and braking mode "regenerative"
    3= output active when "run" and braking mode "freewheel"
20. Disable / safety switch input options (0)
    0 = disable (and reset)
    1 = safety switch stop with wiring monitor (closing contact)
21. Baud rate 0...5 (3)
    0= 9600, even, 1 stop, 3= 19200, even, 1 stop
    1= 9600, odd, 1 stop 4= 19200, odd, 1 stop
    2= 9600, none, 2 stop 5= 19200, none, 2 stop
22. Modbus Address 1...247 (1)

TAKE IN USE

Operating voltage 12-35Vdc ripple less than 20%
An external supply fuse is recommended (2-40A)

Be sharp when connect motor wires, because there is lot of combination. If motor takes much current or run roughly then change wiring.

Default settings are in brackets in parameter list. This are good start-up values

In example picture beside there all input connected, but device work also with less wiring. So connect only needed functions.

Fault outputs are PNP type, and pull up when activates,

Speed adjusting input range can be set with parameter 6 and 7. see picture beside

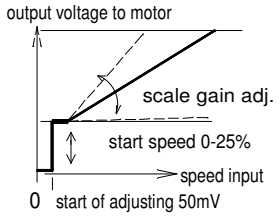

In some application load can be generated energy back to drive, when slowing down speed. Then there needed braking resistor, which absorbed extra energy. NOTICE that the parameter 18 has to be set about 10% higher than unloaded voltage of power supply.
If uses battery supply, then braking resistor would not needed.

CONTROL INPUTS

SPEED input is a analog control input for speed setting. Set signal can be between 0-5V and 0-10V
Speed scaling can be made with parameter 6 and 7.

LOCAL/BUS This input can be used to select control source Local control with card terminal or Buscontrol with Rs-485
This Input options can be set with parameter 11

DIRECTION input is a digital input. It changes the rotation direction. It uses automatically stop/start ramps during change.

SPEED-2 / I-LIMIT is a multifuntion input. Normally this input is a PNP digital input, which activate speed-2 presetting, which has been set with parameter 13.
If parameter 12 is set = 0, then this input changes to analog input for current limit setting, 0-5V reponds lim. value 0-40A

DISABLE / SAFETY SWITCH input is a multifunction input. Normally it works as an digital input, "high" will disable driver and motor goes to freewheeling (disables = all poles floating). This input has highest priority !

This input can be set to work as an safety switch input with line monitor . see picture beside This option can be set with param. 20. Safety switch conneted GND to pin 20, and with dip-switch-1 will activate bias resistor for line monitoring.

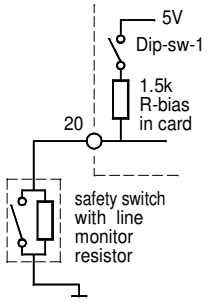

OUTPUTS

FAULT / PULSE OUT This output modes can be set with parameter 16. There is some options when output will be activate. The special mode is pulse output, in this case output gives out rpm-pulses which can scaled with parameter 17

BRAKE output can used to control magnetic brake of motor or switch a braking resistor in regenerative braking. the mode can be set with parameter 19

Rs-485 port can be used to control device with Modbus protocol
This port has own guige sheet " Modbus register definitions for EM-356A"

MONITOR VALUES

1. current 1A / digit
2. braking current 1A / digit
3. hall sensor freq. 0-255Hz
4. operation voltage 0.1V / digit
5. pwm 0-255 (255 = 100%)

INDICATIONS.

Continuous light: Over. temp. or over voltage or disable
Fast blinking : current limit exceeded
Short blinks: shutted down by overcurrent (I-trip)
Long blinks: safety switch wire fault
Slow blinking: shutted down by safety switch

Fault output: (Pin-17 PNP open collector output)
Overtemperature, Overvoltage, Undervoltage.
This indicates also I-Trip if parameter 16 is set to = 0